RAPTOR

USER MANUAL

www.scandiapumps.com/servicepartners
www.support.scandiapumps.com

Contents

1. Description, General Information 4

2. Design, Principle of Operation and Application 5

2.1. Construction 5

2.2. Working Principle 6

2.3. Intended Use 6

2.4. Unintended Use 6

3. Technical Plate Data 7

4. Safety Instructions and Label Locations 8

4.1. Safety Measures 9

4.2. Safety Labels explanation 9

5. Transportation and Storage 11

5.1. Lifting with a Lifting Eye 11

5.2. Lifting with a Forklift 12

5.3. Lifting for installation on the trailer RAPTOR light 13

5.4. Long-term Storage 15

6. Pump Installation 16

7. Use of the Pump Indoors and Outdoors 18

7.1. Outdoor Use 18

7.2. Indoor Use 18

8. Test before Each Use 19

8.1. Pump with electric drive 19

8.2. Pump with Diesel Engine 21

9. Control Panel 23

9.1. Control panel Type 1 23

9.2. Control Panel Type 2 24

10. Log in 25

11. Starting 27

11.1. Starting the Electric Drive Pump in Automatic and Manual Mode 27

11.2. Starting the Diesel Pump in Automatic and manual mode 32

11.3. Starting Raptor light manual mode 36

11.4. Starting Raptor light auto mode 37

12. Monitoring During Operation 38

13. Level Control Devices 39
13.1. Level Control Using 1 Float 40
13.2. Level Control Using 2 Floats 40
13.2. Level Control Using Hydrostatic Sensor (OPTION) 41
14. Stopping the Pump 42
14.1. Stopping the Raptor light 43
15. Draining the Pump at Risk of Freezing 44
16. Maintenance 46
16.1. General 46
16.2. Maintenance instructions 46
16.3. Daily maintenance of the pump 47
16.4. One-time maintenance after 50 hours of operation 47
16.5. Pump maintenance Every 12 months or 500 hours 47
16.6. Lubricants 47
17. Vacuum pump maintenance 48
17.1. Oil level inspection 48
17.2. Oil change 49
17.3. Vacuum pump belt tension 50
18. Problem / Solution 52

1. Description, General Information

In this manual, the correct use of the Raptor centrifugal pump, which shall be observed during storage, transportation, installation, and operation of the pump unit is described.

Failure to comply with the provisions of this manual may result in damage to the pump unit or premature failures, which may cause damage. Any such actions shall invalidate the guarantee.

All information in this publication is based on the latest product information that was available at the time of print approval.

No part of this manual may be reproduced without the written permission of the manufacturer.

This manual is an integral part of the pump assembly, and, in case of resale, shall be accompanying the pump unit.

Manufacturer reserves the right to make changes at any time without prior notice and without accepting any obligations.

2. Design, Principle of Operation and Application

Raptor is a versatile wastewater pump, which is equipped with a vacuum system and a vacuum pump for automatic and extremely fast priming. Priming beforehand to ensure proper suction is therefore unnecessary. Pumps are supplied in a sound-attenuated version or on the frame. The pumps are suitable for pumping clean and polluted liquids containing large solids. The pump set was designed for a temperature range of 0 °C to +40 °C.

2.1. Construction

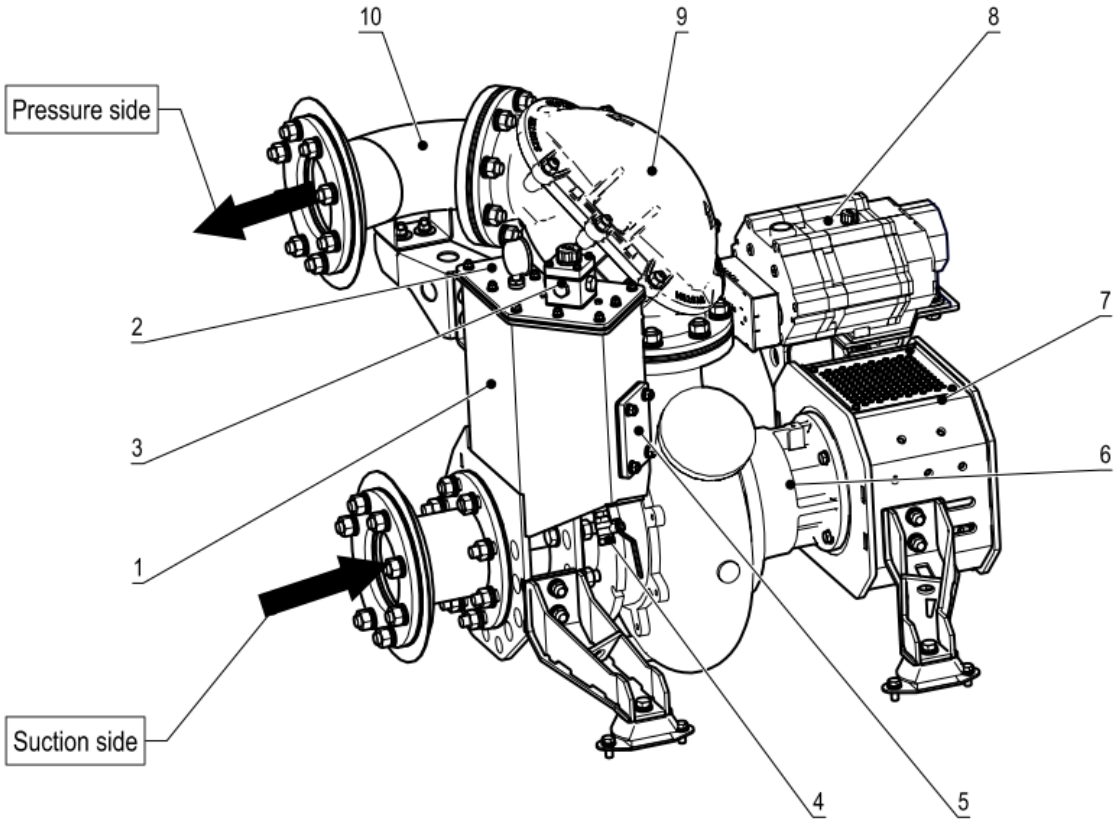

Main components:

1. Suction chamber
2. Suction chamber cover
3. Suction plunger housing
4. De-pressure valve
5. Cleaning cover
6. Centrifugal suction pump
7. Suction pump housing
8. Vacuum pump
9. Non-return valve
10. Pressure side outlet

2.2. Working Principle

- When the engine is running both the vacuum pump and centrifugal pump rotate. The return valve on the discharge of the pump closes the discharge line. As there is no liquid in the vacuum chamber the float valve is open allowing the vacuum pump to draw air from the vacuum chamber.
- The vacuum pump will suck out the air from the vacuum chamber and suction line.
- Because of the vacuum created in the suction line, water is drawn up the suction hose until it reaches the pump.
- As soon as water enters the pump it will start to discharge and the speed of flow in the suction line will increase.
- The vacuum chamber will start to fill-up with water, causing the float valve to rise until it reaches a level where the float valve is closed, and no further air can be drawn out of the vacuum chamber.
- As soon as the pump is starved of liquid, air enters the suction line and then in turn the vacuum chamber, causing the water level to decrease in the vacuum chamber.
- As the water level in the vacuum chamber decreases the Float valve reopens allowing the Vacuum pump to re-prime the pump.

2.3. Intended Use

The pump is designed to pump:

• Surface water
• Drainage water
• Sewage
• Rainwater

2.4. Unintended Use

The pump is not designed to pump:

• It is not permitted to use the pump for pumping flammable and/or explosive substances.
• It is not permitted to deploy a standard pump or pump unit in an environment in which there is a danger of fire and/or explosion.
• It is not permitted to deploy a standard pump or pump unit in an *ATEX* environment.
• Use the pump only for those applications listed on the pump specification sheet.
• It is not permitted to use the pump for any application and/or field of activity other than that for which the pump was originally specified and installed without written permission from the manufacturer.

WARNING – Manufacturer is not responsible for incorrect use and/or application of the pump.

Note

Pump is not designed for food processing. The materials used in the selected pump version must in all cases be checked in advance for their suitability for the concerned foodstuff.

3. Technical Plate Data

Standard technical specification example

AEONPUMP

Mobile dewatering pump
RAPTOR 6E

Maximum paressure:	25 m
Maximum flow:	400 m3/h
Solids handling:	100 mm
Vacuum pump power:	1.5 kW
Pump power:	15 kW
Rotation:	1470 rpm
Voltage:	400 V
Frequency:	50 Hz
Sound:	at 10m 60 dB
Weight:	1295 kg
Dimensions:	2300x1100x1600 mm

Manufacturer
LLC "AEONPUMP"
Silmalu street 29 - 7, Salaspils
Salaspils county, Latvia, LV-2121
www.AEONPUMP.com
Email: info@aeonpump.com
tel.+371 2202 4409

CE

Serial Nr.: **SN-RE000001**
Production year **2021**

4. Safety Instructions and Label Locations

Pay particular attention to the sentences preceded by any of the following safety symbols and/or words: They are designed for your safety and to prevent damage to the environment and the pump unit.

DANGER – When the danger symbol with the text 'DANGER' is displayed, it is accompanied by the information that is particularly important for the safety of all those involved. Ignoring the information can result in injury (possibly serious) or even death.

WARNING – When the warning symbol with the text 'WARNING' is displayed, it is accompanied by information that is particularly important for everyone involved with the pump unit. Failure to observe this information may result in injury or damage to the pump unit (possibly serious).

DANGER ELECTRICITY – When the warning symbol "DANGER ELECTRICITY" is displayed, it is accompanied by crucial information, in case of non-observance of which the person operating the pumping unit may be compromised by electric shock.

NOTE – Provides useful information

The pump unit conforms to the European Machinery Directive. However, this does not exclude the possibility of accidents if used incorrectly. Use of the pump for an application and/or deployment of the pump in an environment other than defined at the time of purchase is strictly prohibited and can result in a hazardous situation. This is particularly true for corrosive, toxic or other hazardous liquids.
The pump unit may only be installed, operated, and maintained by persons who have received appropriate training and are aware of the associated dangers. The installer, operator and maintenance personnel must comply with the local safety regulations. The company management is responsible for ensuring that all work is performed by qualified personnel in a safe manner.

It is not permitted to make changes to the pump unit without written permission from Aeonpump SIA. If changes are made to the pump without the written permission of Aeonpump SIA, Aeonpump SIA accepts no responsibility or liability whatsoever.

DANGER – Ensure that hot/cold and rotating parts of the pump are shielded adequately to prevent unintentional contact. It is not permitted to start the pump if such guards are missing or damaged.

The company management must ensure that everyone who works with/on the pump unit is aware of the type of liquid that is being pumped. These persons must know what measures are to be taken in the event of leakage. Dispose of

any liquids that have leaked, in a responsible manner. Observe local regulations.

DANGER – Never allow the pump unit to run with a blocked discharge line. The heat build-up could lead to an explosion.

4.1. Safety Measures

DANGER – To prevent accidents and damage to the pump unit or the environment, the following safety measures should be taken:

- Use personal protective equipment (PPE) during loading, unloading, transportation and installation of the pump set.
- Loading, Unloading, Transportation and Installation of the pump unit should only be carried out by competent approved persons.
- Provide ample space around the pump unit to allow clear, unrestricted access.
- Always keep the housing doors closed during operation.
- Always stop the pump unit first and ensure all controls are in the Off position on the panel before repair and maintenance.
- Pump units should ONLY be lifted using the Lifting Lug, which is situated in the centre of the pump set on top of the soundproof housing or by means of a Fork Lift using the Channels situated on the base of the pump set. Before lifting the pump set All suction and discharge hoses MUST be disconnected. The pump unit must NEVER be lifted with the engine running.
- Pump units in storage must not be stacked more than two (one above the other).

Note

To prevent unauthorized persons from operating or encountering the pump unit, it is advisable to install a barrier or fence.

4.2. Safety Labels explanation

These labels warn you regarding the possible hazards that may cause serious injury. Read the labels and safety features and warnings described in this manual carefully.

If the label peels off or is difficult to read, contact the pump manufacturer to replace it.

	DANGER - Ignoring the information can result in injury (possibly serious) or even death.
	Diesel - To identify the fill point for diesel fuel.
	Close doors - keep the doors closed when the pump is in use.
	Ear protection - Use hearing protection when the engine is running.
	DANGER ELECTRICITY - be aware of electricity.
	Freezing - be aware of freezing.
	Hot surface - be aware of hot surface.
	User manual - see information in user manual.
	Contact information - contact information ***info@aeonpump.com***.
	Oil - To identify the engine oil filler cap or fill point.
	Rotating parts - rotating parts keep away.
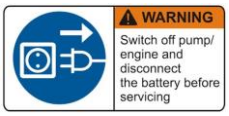	**Switch OFF** - switch off the engine and disconnect the battery before servicing
	Water tap - place for drain the water.

5. Transportation and Storage

5.1. Lifting with a Lifting Eye

DANGER – Before the commencement of the lifting process, first, the lifting capacity of the lifting gear and the weight of the item to be lifted shall be determined.

DANGER – All persons not involved in the lifting operations shall be removed when lifting loads from the lifting area.

DANGER – Never walk/stand under the lifted load. This can result in a life-threatening situation.

DANGER – If there is a slightest suspicion regarding the unsafe state of the load or others at the time of lifting, the operations shall be stopped.

WARNING – Always disconnect all external connections before moving the pump unit.

WARNING – Lifting forces must be as vertical as possible; the maximum lifting angle is 15°.

There is a lifting eye located on the top of the housing. Only lift the unit from this lifting eye.

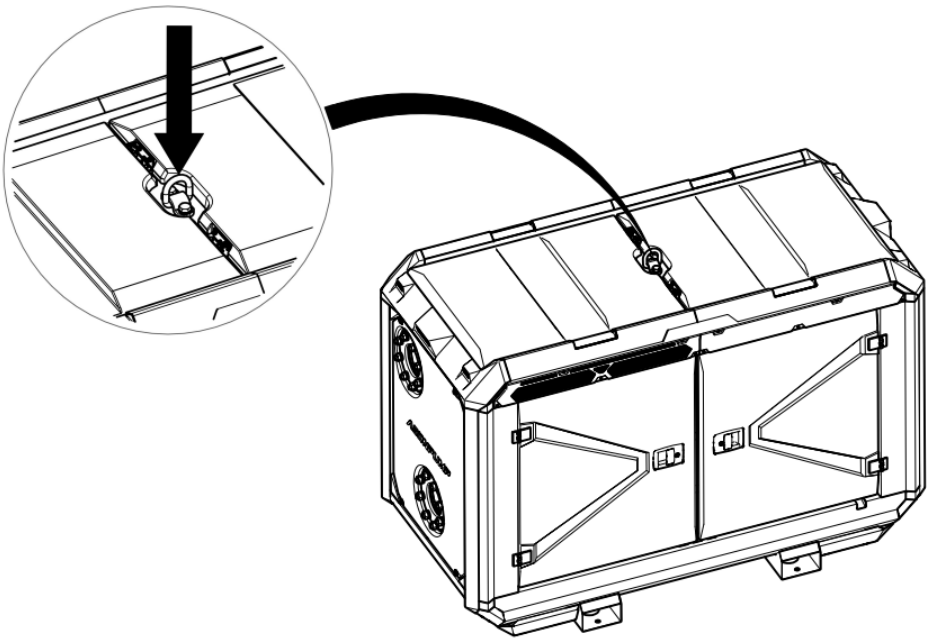

WARNING – If the pumping unit is mounted on a swampy or muddy surface, the equipment may sink into the ground, resulting in a higher lifting force to pull the unit away from the ground.

DANGER – NEVER move or lift the pumping unit by the corner sections of the housing or other places, which are not intended for lifting.

5.2. Lifting with a Forklift

Forklift pockets can be used for moving the pump unit with a forklift. The forks of the forklift must be inserted into these pockets to lift the pump unit.

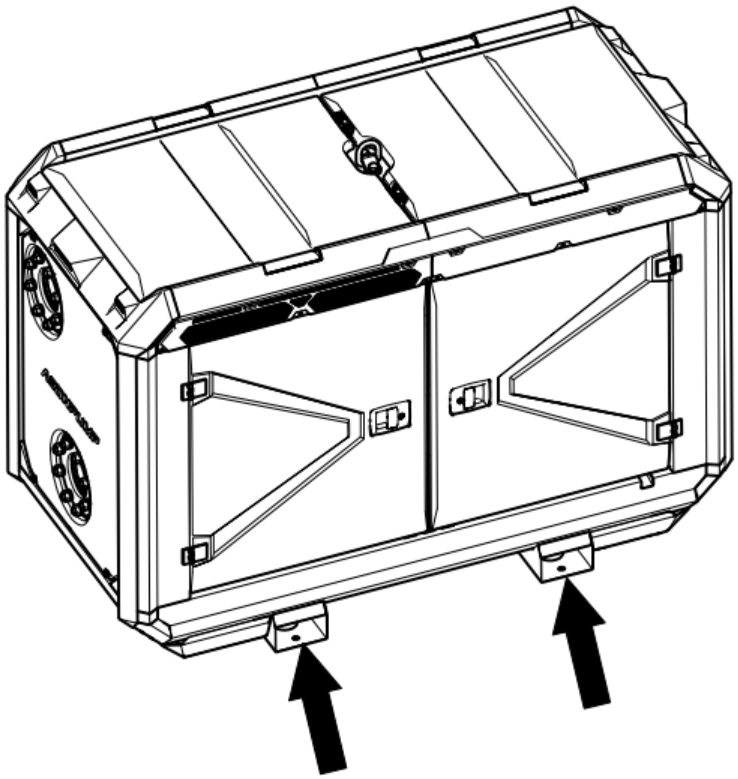

WARNING – Use certified lifting equipment with an adequate lifting capacity and always lift from directly above. Lifting from an angle can lead to dangerous situations. Lifting work may only be performed by appropriately authorized personnel. Because many different versions of the pump unit are available, only general instructions are provided. See the specification sheet for the pump unit for the weight and dimensions.

5.3. Lifting for installation on the trailer RAPTOR light

Before pump unit lifting must take off the canopy top cover, to do these follow the following steps.

- Lift up the top cover

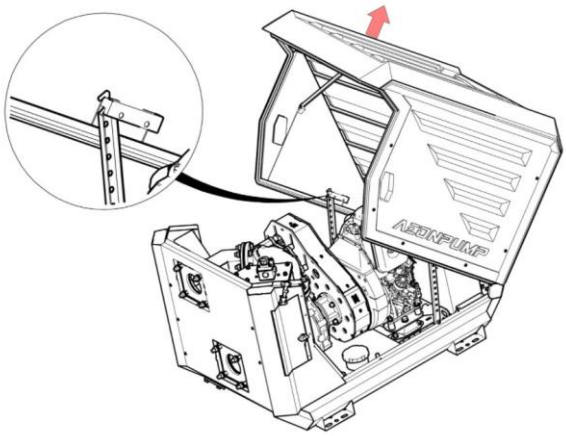

- Hold the top cower and unscrew the hinges bolts

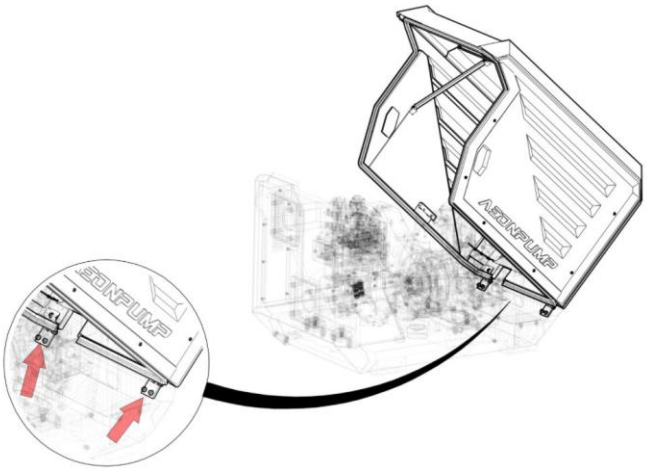

- Use the lifting beam to lift the pump unit

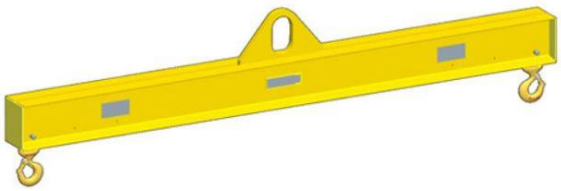

- Lift the pump unit only with the following lifting points

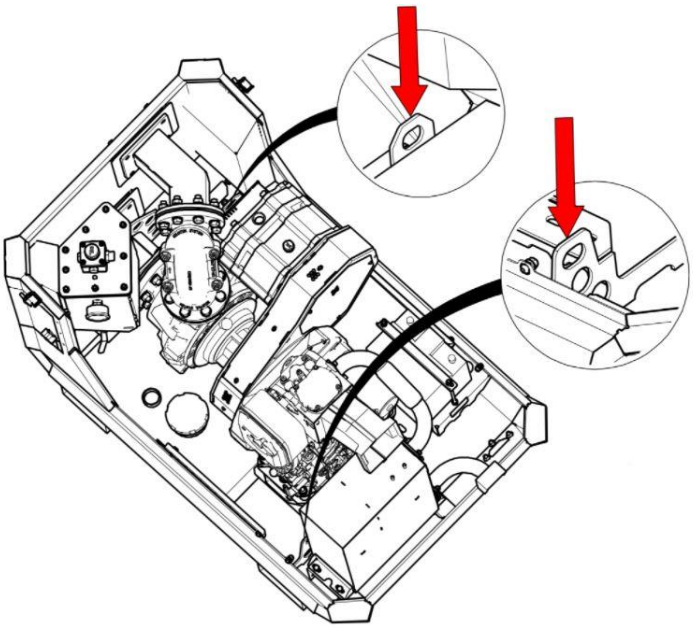

- Place the pump unit in place where it's needed and screw it through fixing points

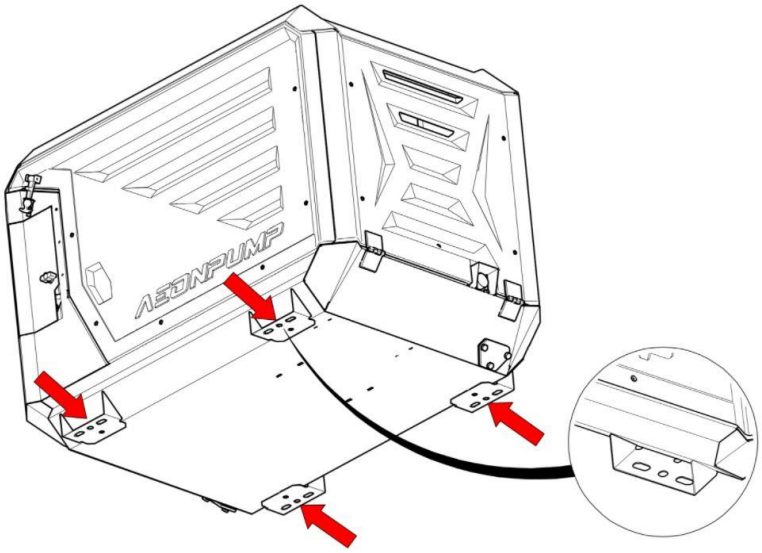

5.4. Long-term Storage

Before you place the pump for storage for a longer period, you shall follow these steps:

- Make sure that there is no excess moisture or dust in the storage area, as well as there are no chemicals that may harm the pumping unit.
- Remove the residue from the inside of the pump if the pump has been used in muddy, sandy water, or very dirty water.
- Open the lid of the nonreturn valve, lift out the valve ball, clean it and clean the ball fit from foreign objects, close back the lid.
- Pump clean water with the pump before switching it off, otherwise restarting it may damage the impeller.
- After rinsing process, open the drain valve, drain the water completely, then close the drain valve.
- Pay attention to the wiring for possible damage.
- Check the oil levels in the bearing unit and vacuum pump housing.
- Inspect the pump visually for any mechanical damage.
- Cover the exhaust and intake nozzles or the whole pump with a cover that will protect against dust deposition in or on the pump.
- Pump units may be stacked on top of each other for a maximum of 2 levels.

6. Pump Installation

WARNING – Failure to follow the guidelines for the placement and installation of the pump unit can result in danger to the user and/or severe damage to the pump or pump unit.

DANGER – The pump shall be so placed that it does not have the opportunity to slide, tip over, fall, or otherwise endanger the user or other personnel.

***AEONPUMP SIA* is not responsible for accidents and damage that result from failure to follow the guidelines in this manual. Such use results in forfeiture of the right to assert any warranty or damage compensation claims**

• Place the pump on a horizontal surface capable of supporting the load.

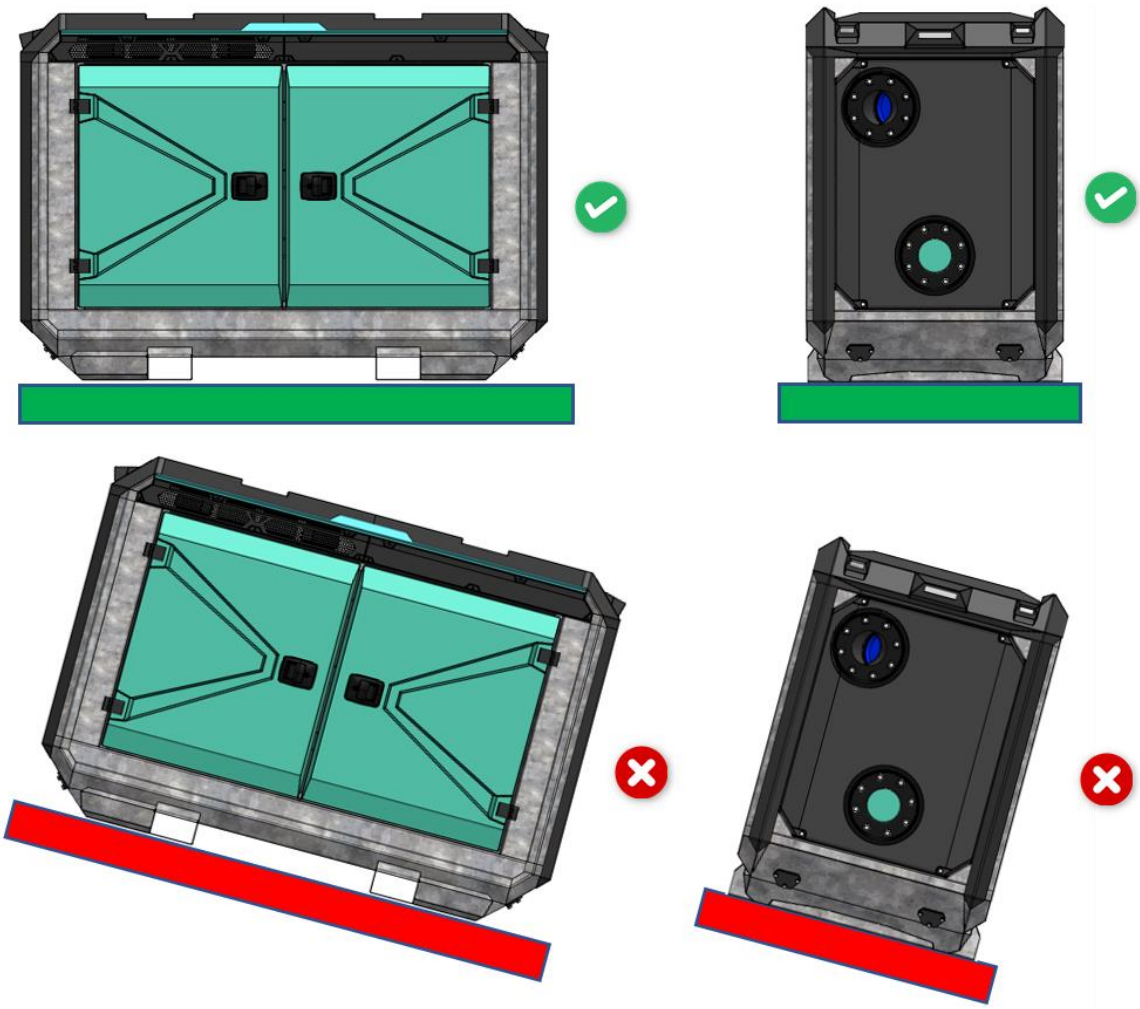

- Make sure the pump unit is placed in such a manner that it is not subjected to any distorting forces.
- Make sure there is sufficient space around the pump unit for operation and maintenance activities. The recommended free access distance is 2 meters.
- Make sure that the sides of the pumping unit are not covered or are not close to the wall. This is important because the pump cools directly from the ventilation spaces specially created on the sides.
- Install shields to prevent contact with hot surfaces > 70 °C (158 °F). Affix warning symbols where necessary.
- When pumping hot liquids, ensure that there is sufficient air circulation to prevent bearings and lubricants from overheating

7. Use of the Pump Indoors and Outdoors

7.1. Outdoor Use

The pump unit is suitable for outdoor use. In addition to the general instructions, the following additional requirements must be met:

- Ensure that there is sufficient free space around the air intake, so the engine can draw as much air as it needs.
- Avoid dusty conditions and locations where corrosion or erosion can occur.
- Do not place the pumping unit on an unstable surface.
- Ensure that there is sufficient free space around the hot air outlets, and they are not blocked. A free distance of at least 2 meters is recommended.
- Make sure that all electrical installations are safe and professionally installed.
- Make sure that the exhaust gases do not create a dangerous situation for the environment.

7.2. Indoor Use

The pump unit is suitable for indoor use. In addition to the general instructions, the following additional requirements must be met:

- Make sure that ventilation is suitable in the pumping area, as the pump emits toxic CO2 gas while the pump is running.
- Ensure that there is sufficient free space around the air intake, so the engine can draw as much air as it needs.
- Prevent high ambient temperature and humidity. Avoid dusty conditions and locations where corrosion or erosion can occur.
- Ensure that there is sufficient free space around the hot air outlets, and they are not blocked. A free distance of at least 2 meters is recommended.
- Do not place the pumping unit on an unstable surface.
- Make sure that all electrical installations are safe and professionally installed.

8. Test before Each Use

8.1. Pump with electric drive

Testing the pump before each use is a particularly important procedure when operating the pump, since it is possible to notice or eliminate any deficiencies in a timely manner, thus, protecting the user or other personnel from dangerous situations.

• Check the oil level in the vacuum oil reservoir via gauge glass in the sidewall of the vacuum pump, and supply if required. The oil must be clear and full of glass (See chapter “17. Vacuum pump maintenance”).

.

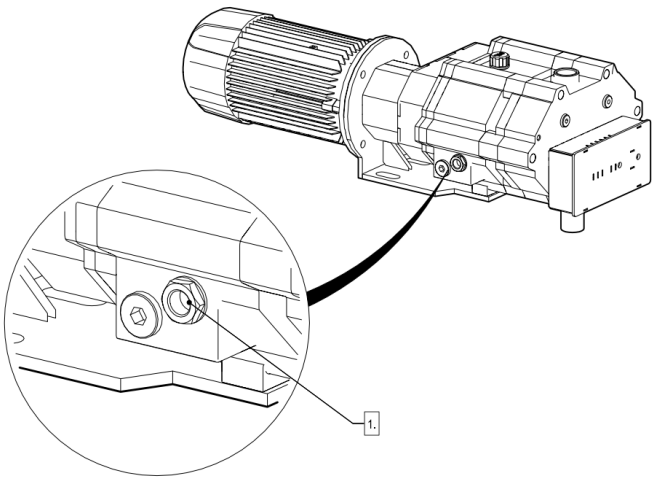

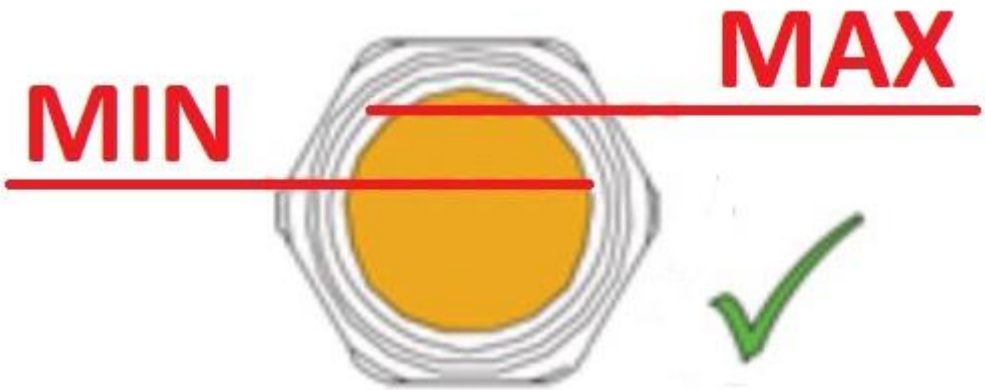

• Check the oil level and clarity in the pump seal chamber (1). If the oil is not clear but white, it means that the oil contains water. Drain this mixture, check the gasket, and fill the gasket chamber with fresh oil. *(See screw centrifugal pump user manual).*

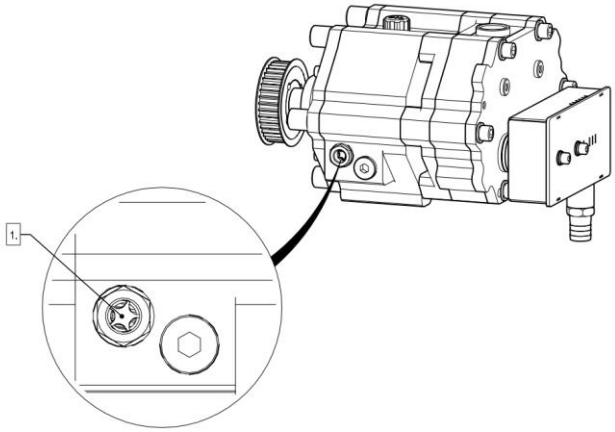

• Check that all guards and panels are installed and not damaged.
• Check that the equipment is securely installed, the equipment is located on a sufficiently load-bearing surface.
• Check whether the drain valve below the pump housing is closed.
• Check whether all connections of suction and delivery lines are tightened and connected securely.
• Check that the pump is positioned correctly, in accordance with Chapter "6. Pump Installation"
• Check that electrical installations are not damaged and are safe.
• Check that electrical installations are installed correctly in accordance with all local regulations.
• Check the vacuum pump inlet filter (1).

DANGER ELECTRICITY – The pump must be disconnected from the mains before the inspection of the wiring.

8.2. Pump with Diesel Engine

Testing the pump before each use is a particularly important procedure when operating the pump, since it is possible to notice or eliminate any deficiencies in a timely manner, thus, protecting the user or other personnel from dangerous situations.

• Check the oil level in the vacuum oil reservoir via gauge glass in the sidewall of the vacuum pump, and supply if required. The oil must be clear and full of glass. (See chapter “17. Vacuum pump maintenance”).

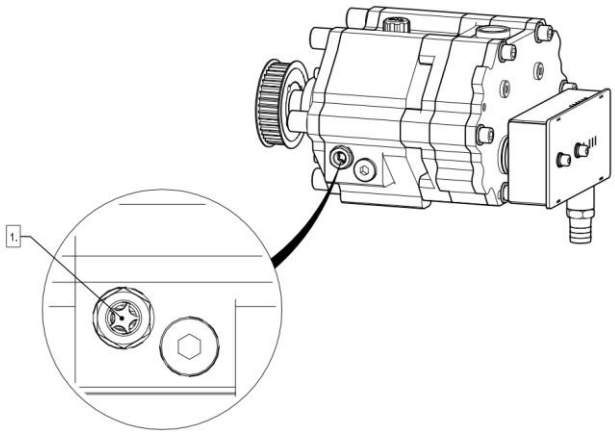

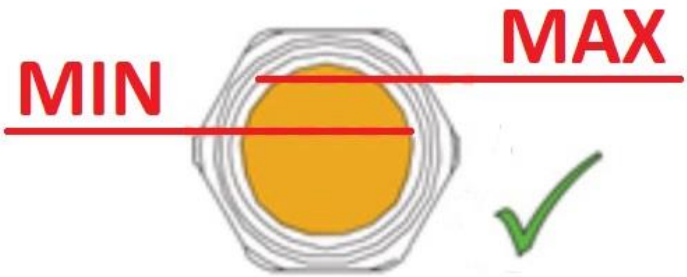

• Check the oil level and clarity in the pump seal chamber (1). If the oil is not clear but white, it means that the oil contains water. Drain this mixture, check the gasket, and fill the gasket chamber with fresh oil. *(See screw centrifugal pump user manual)*

• Check the oil level of the engine, pull out the oil level dipstick, the oil level shall be between MIN and MAX; if the oil is not enough then top up with fresh oil, the specification of the oil can be found in the *engine manufacturer's instructions*.

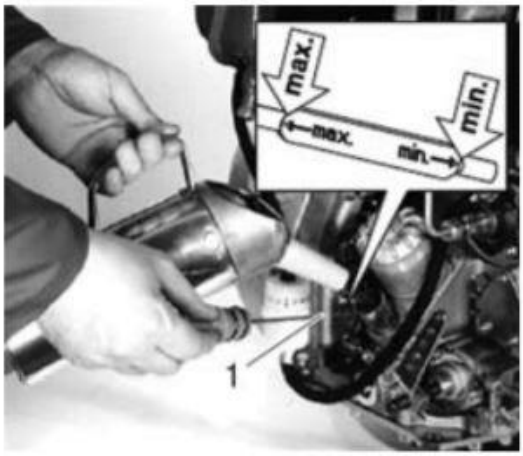

• Check if there is sufficient fuel in the fuel tank.
• Bleed the fuel system, if necessary. *(see diesel engine manual).*

• Check that all guards and panels are installed and not damaged.
• Check that the equipment is securely installed, the equipment is located on a sufficiently load-bearing surface.
• Check that the pump is positioned correctly, in accordance with the Chapter "6. Pump Installation"
• Check whether the drain valve below the pump housing is closed.
• Check whether all connections of suction and delivery lines are tightened and connected securely.
• Check the vacuum pump inlet filter (1)

9. Control Panel

9.1. Control panel Type 1

1. Main screen (alterable) with buttons 7 and 8
2. Language selection
3. Manual / automatic control
4. Settings
5. *START* button
6. ESC – return button to the previous window, or cancellation of an action
7. Home screen change button or menu on the left
8. Home screen change button or menu on the right
9. Pump speed acceleration button or menu up
10. Pump speed deceleration button or menu down
11. OK - Confirmation button
12. *STOP* button
13. Current or error history button
14. Light button
15. Information button

9.2. Control Panel Type 2

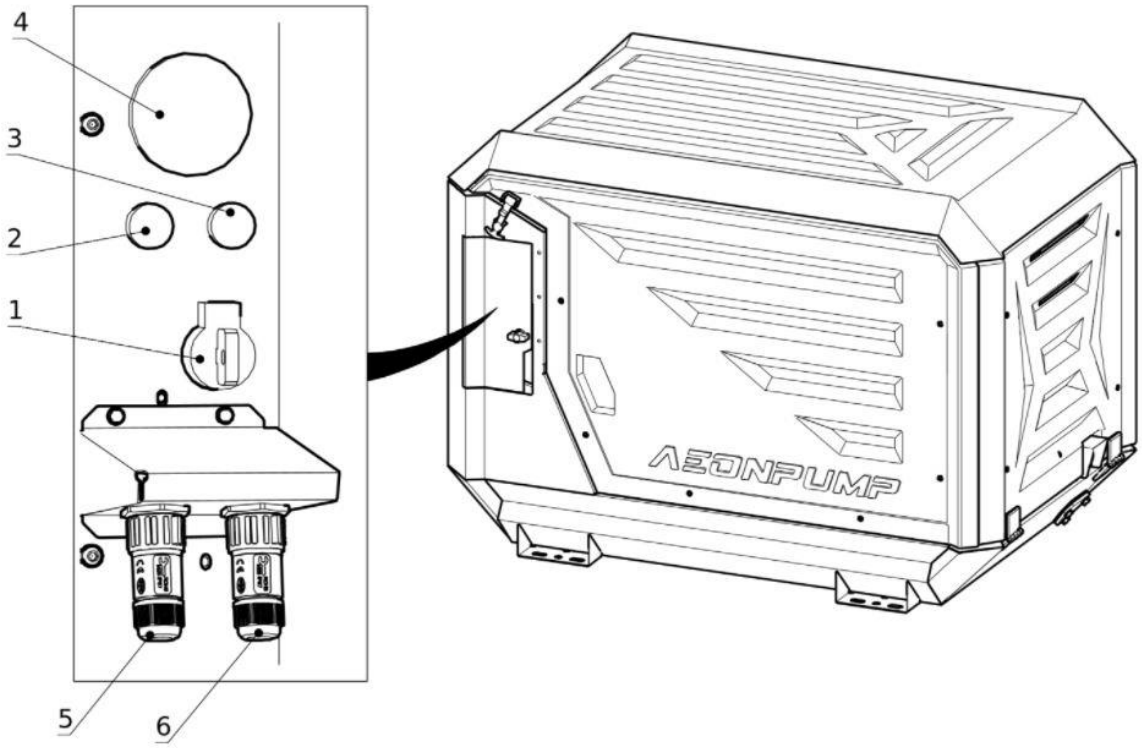

1. Start - Stop switch
2. Oil pressure indicator
3. Battery charging indicator
4. Hour counter
5. Min level connector
6. Max level connector

10. Log in

To change pump parameters are possible only after logging in as a user.
To do log in, must do following steps:

- Press the "Settings" button 4.

- Choose the Log in field pressing the button 9 and 10 in the Control Panel.

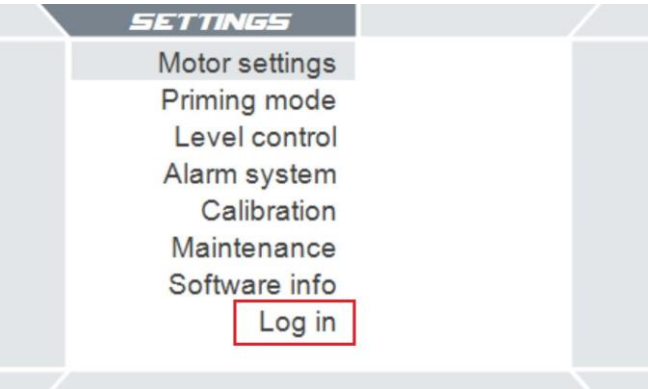

- Accept pressing *OK* button in the Control Panel, input password 1234 and accept with OK button in the Control Panel.

- Using Control Panel buttons 9 and 10 choose the Log in field and accept with OK button in the control Panel, the following window will appear.

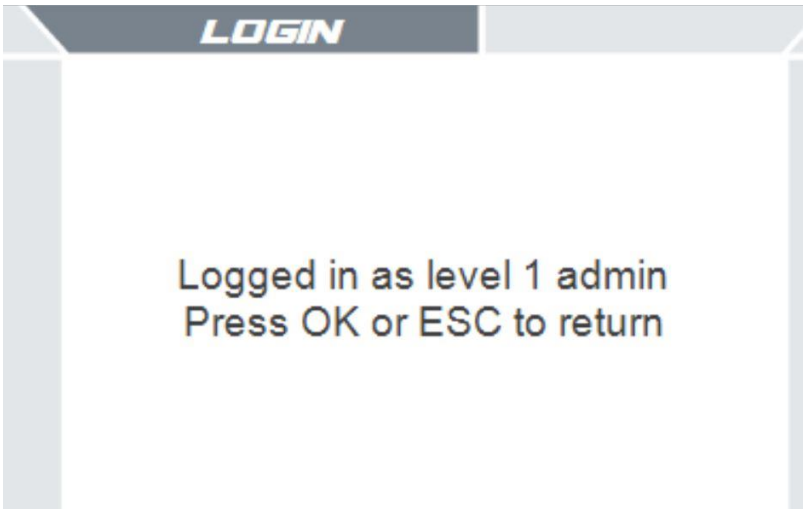

- Press the button *OK* or *ESC* to return

11. Starting

11.1. Starting the Electric Drive Pump in Automatic and Manual Mode

- Follow the requirements of the Chapter "6. Pump Installation"
- Follow the requirements of the Chapter “7. Use of the Pump Indoors and Outdoors”
- Follow the requirements of the Chapter “8.1 Pump with Electric Drive”
- Connect the supply cable to the pump outlet (3) and get supply cable through special channel (4).

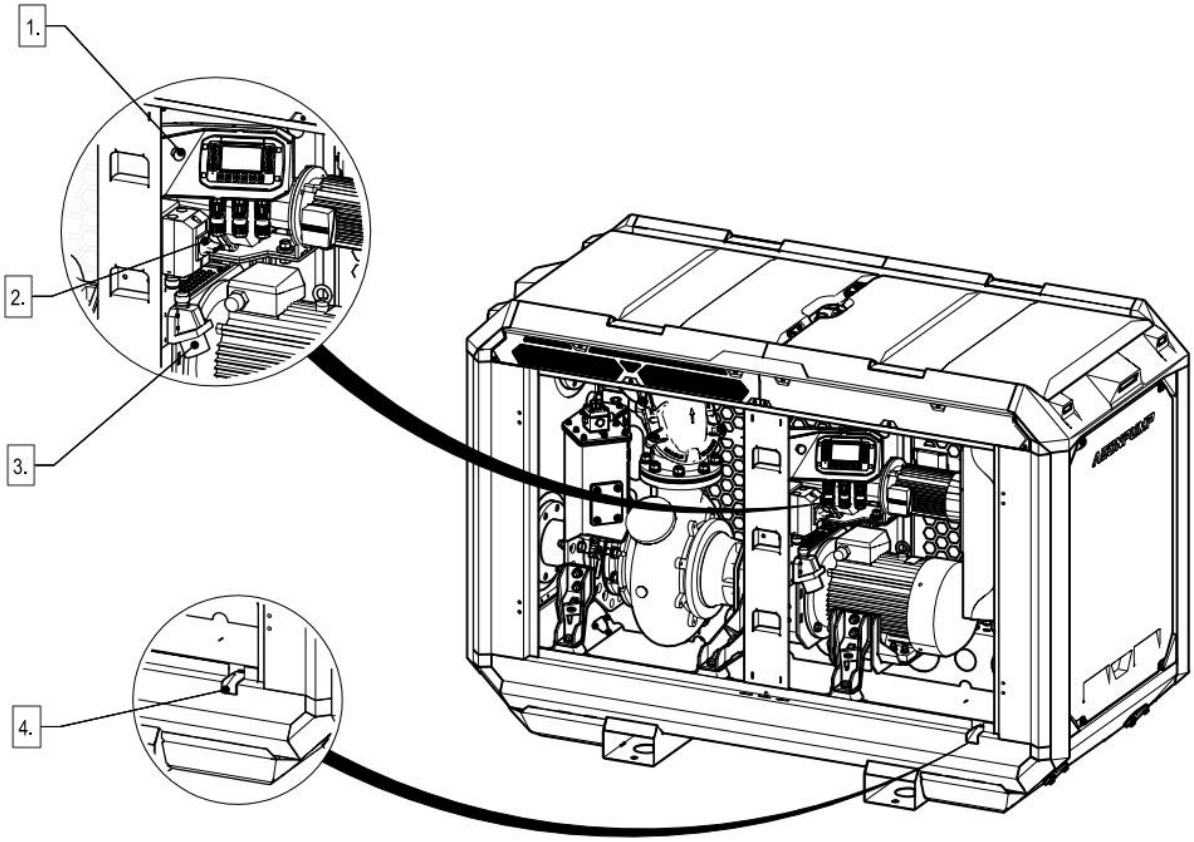

- Connect level control devices (floats or hydrostatic sensor) if necessary. *See Chapter 12.*
- Turn on the main switch (2)
- Wait for the control panel to start.
- If the *Emergency STOP* button (1) is pressed, on the screen appears the following window. Release the STOP button.

- If need to set the level control in automatic mode (floats or hydrostatic sensor), press the "Settings" button 4.

- Select "Level control" by pressing the control panel buttons 9 and 10.

- Choose one of the level controls by pressing the button 9 and 10 in the Control Panel.
- Change these must be logged in like a user. *(See chapter 10 Log in)*

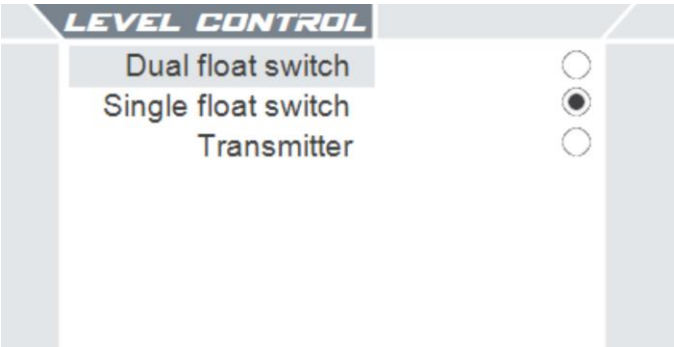

- Confirm the level control device selected *with the OK* button in the control panel.

- Return to the main display by pressing the *ESC* button in control panel

- Press button 3 in the control panel, manual/automatic control

- Select *Auto* or *Manual* mode with buttons 9 and 10.

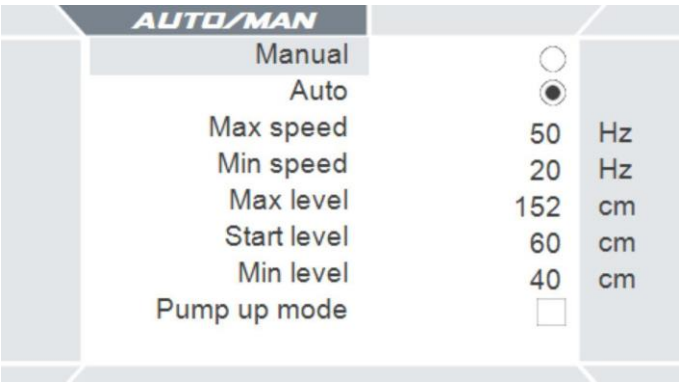

- Confirm the level control device selected *with the OK* button in the control panel.

- Return to the main display by pressing the *ESC* button in control panel

- Press the *START button* in the Control Panel

- The electric motor will start operating.

Pump speed for electric motor can only be changed in the manual mode with control panel buttons 9 and 10

DANGER – If there are any problems during the operation of the pump, the pump must be switched off immediately, the cause shall be rectified, however, if it is not possible to rectify the cause, it is imperative to contact the manufacturer.

11.2. Starting the Diesel Pump in Automatic and manual mode

- Follow the requirements of the Chapter "6. Pump Installation"
- Follow the requirements of the Chapter “7. Use of the Pump Indoors and Outdoors”
- Follow the requirements of the Chapter “8.2 Pump with Diesel Engine”
- Connect level control devices (floats or hydrostatic sensor) if necessary. *See Chapter 12.*
- Close the earth switch, if present
- Turn on the main switch (2)
- Wait for the control panel to start

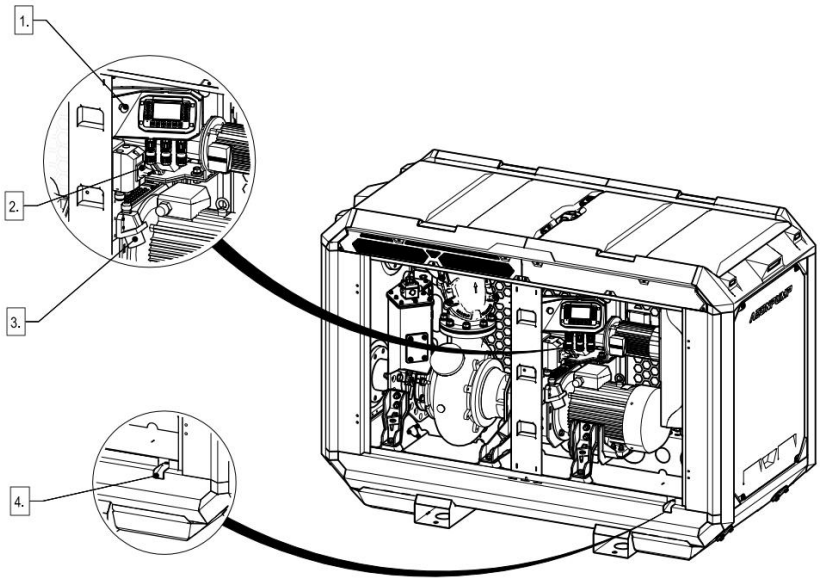

- If the *Emergency STOP* button (1) is pressed, on the screen appears the following window. Release the STOP button.

- If need to set the level control in automatic mode (floats or hydrostatic sensor), press the "Settings" button 4.

- Select "Level control" by pressing the control panel buttons 9 and 10.

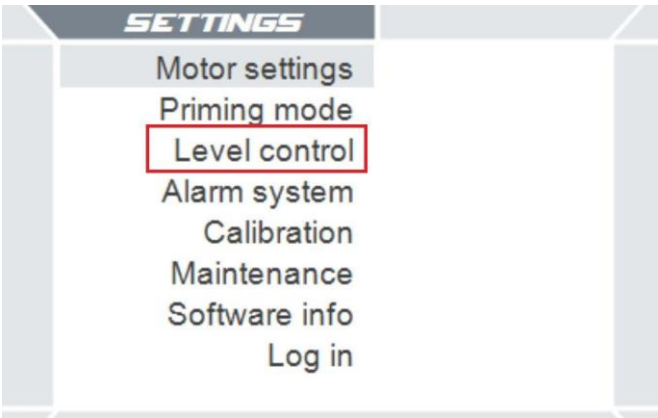

- Choose one of the level controls by pressing the button 9 and 10 in the Control Panel.
- Change these must be logged in like a user. *(See chapter 10 Log in)*

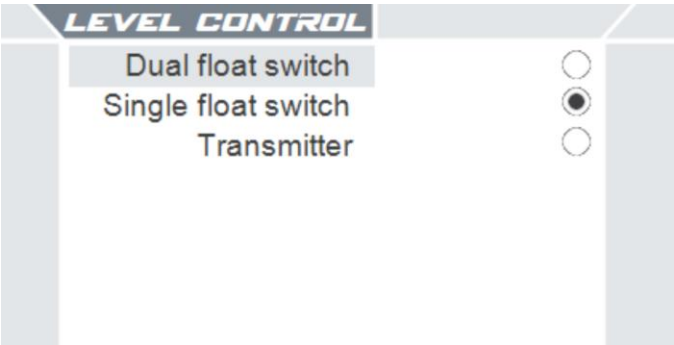

- Confirm the level control device selected *with the OK* button in the control panel.

- Return to the main display by pressing the *ESC* button in control panel

- Press button 3 in the control panel, manual/automatic control

- Choose *Auto* or Manual mode.

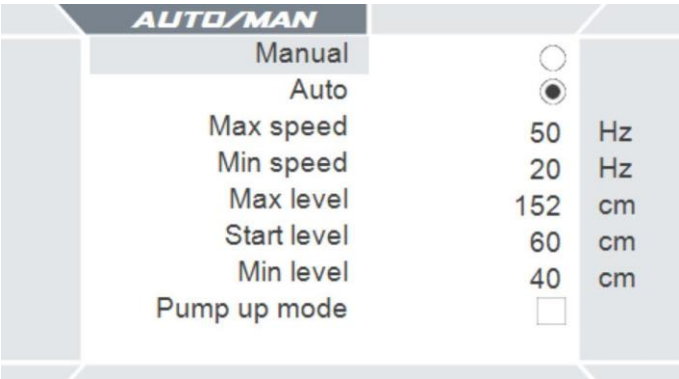

- Confirm the level control device selected *with the OK* button in the control panel.

- Return to the main display by pressing the *ESC* button in control panel

- Press the *START button* in the Control Panel

- The diesel engine will start operating.

Pump speed for electric motor can only be changed in manual mode with control panel buttons 9 and 10

DANGER – If there are any problems during the operation of the pump, the pump must be switched off immediately, the cause shall be rectified, however, if it is not possible to rectify the cause, it is imperative to contact the manufacturer.

11.3. Starting Raptor light manual mode

- Follow the requirements of the Chapter "6. Pump Installation"
- Follow the requirements of the Chapter “7. Use of the Pump Indoors and Outdoors”
- Follow the requirements of the Chapter “8.2 Pump with Diesel Engine”
- Connect level control devices (floats) if necessary. *See Chapter 12.*
- Close the earth switch, if present
- Make shore Start - Stop switch is on the position 0

- Turn on the Start - Stop switch on the control panel to position 1. The oil pressure and battery charging indicators must light on

- Turn the switch on START position 2, when the engine is started, release the switch. switch springs back to position 1 itself. Oil pressure and battery charging indicators must extinguish

11.4. Starting Raptor light auto mode

- Follow the requirements of the Chapter "6. Pump Installation"
- Follow the requirements of the Chapter “7. Use of the Pump Indoors and Outdoors”
- Follow the requirements of the Chapter “8.2 Pump with Diesel Engine”
- Connect level control devices (floats) if necessary. *See Chapter 12.*
- Close the earth switch, if present
- Make shore Start - Stop switch is on the position 0.

- Connect and set the floaters see chapter “13. Level control devices”
- Turn on the Start - Stop switch on the control panel to position P. Pump unit is set to auto mode.

12. Monitoring During Operation

DANGER – During the operation of the pump, no activities related to its maintenance, modifications to the pump or supply, output system, or electronics, and other activities are allowed.

DANGER – The pump shall not be moved during operation.

DANGER – The pump must be switched off before carrying out any work on the pump system.

When the pump is in operation, it is imperative to pay attention to the following:

- During operation of the pump, attention shall be paid to the stability of its operation, there shall be no unnecessary sounds, noise, and vibrations.
- Check for oil leakage from the vacuum pump or mechanical seal chamber.
- Check for water leaks.
- For pumps fitted with diesel engine, engine oil leakage, fuel leakage and opacity shall be checked.
- Check that it does not rotate without the liquid to be pumped, which may result in damage to the mechanical seal.
- Check the pressure gauge whether the pump develops pressure.
- Check the vacuum gauge (1) whether the pump develops vacuum.

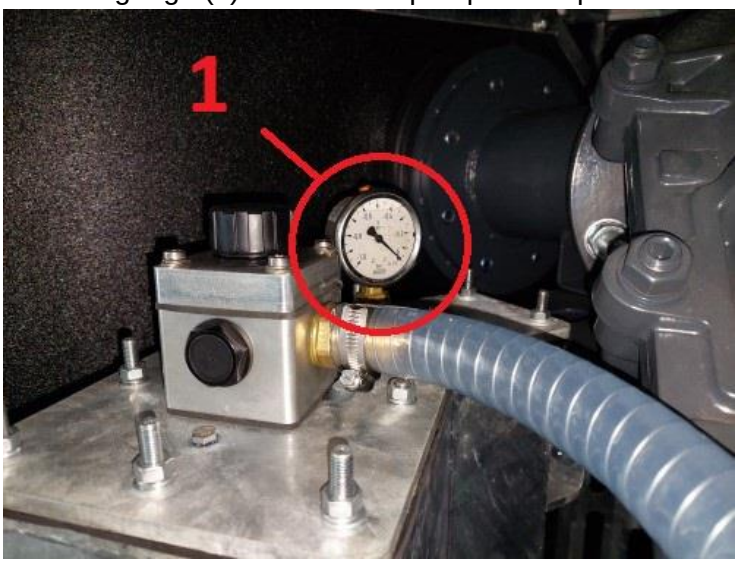

DANGER – If there are any problems during the operation of the pump, the pump must be switched off immediately, the cause shall be rectified, however, if it is not possible to rectify the cause, it is imperative to contact the manufacturer.

13. Level Control Devices

DANGER – When the pump is set to the automatic mode, under no circumstances, maintenance shall be performed, or suction or discharge line nodes reconnected; it is prohibited to relocate the pump or perform any other operations as the pump can switch on independently. Before starting these operations, the pump shall be completely switched off.

When using float switches, place the floats in such a way that the pump does not turn on more than four (4) times in one hour.

Level control sockets are under the control panel.

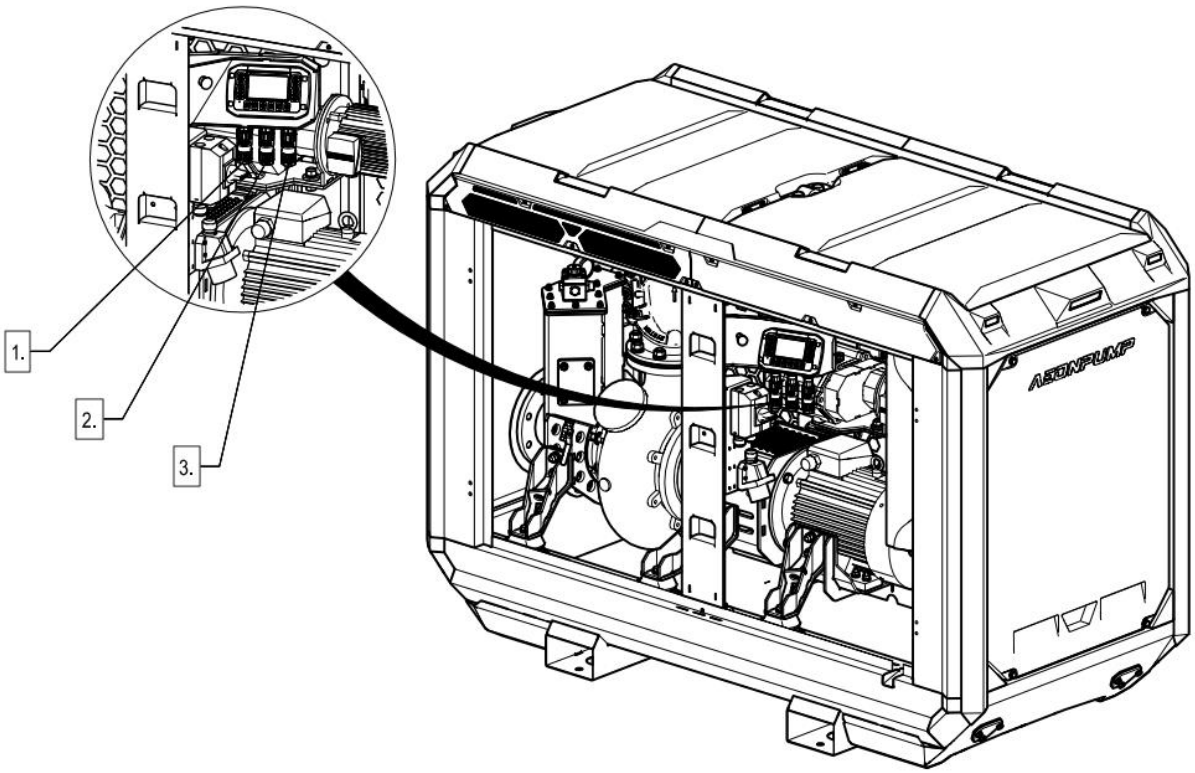

1 - Minimum level
2 - Maximum level
3 - Hydrostatic sensor (option)

Raptor light

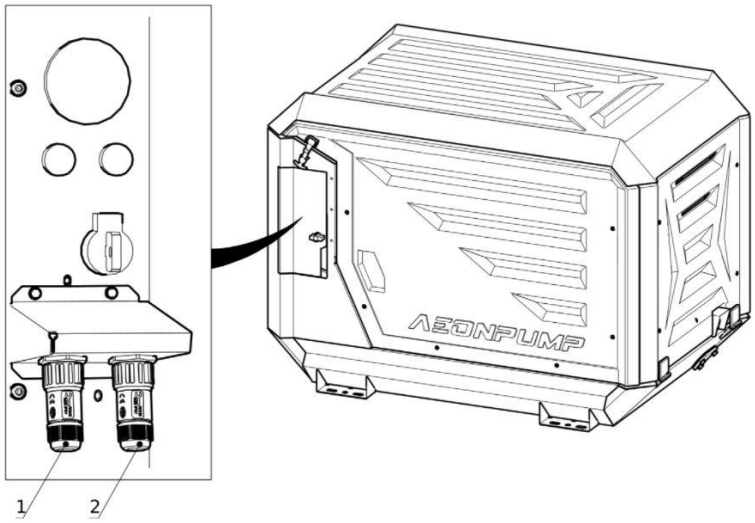

1 - Minimum level
2 - Maximum level

13.1. Level Control Using 1 Float

When a small difference between the minimum and maximum suction limits is required, only one float control can be used.

Level Control Using 1 Float

13.2. Level Control Using 2 Floats

When a large amount of water is needed from the minimum and maximum suction limits, a control of 2 floats can be used.

Level Control Using 2 Floats

13.2. Level Control Using Hydrostatic Sensor (OPTION)

The hydrostatic sensor is only an option, it is easier to operate using this sensor. And it is possible to pump the required amount of fluid to be pumped much more accurately. The advantage of a hydrostatic sensor is the simple use.

14. Stopping the Pump

Both pumps fitted with either electric or diesel engine have the same stopping procedure. Only the automatic and manual mode stopping differs.
For diesel engine must switch off earth switch.

- If the pump is in manual mode, with control panel buttons 9 and 10, gradually reduce the pump speed to a minimum. If the pump is operating in automatic mode, the pump will automatically stop and shut down itself.

- Press the stop button on the control *panel*.

- Turn off the main switch (2)

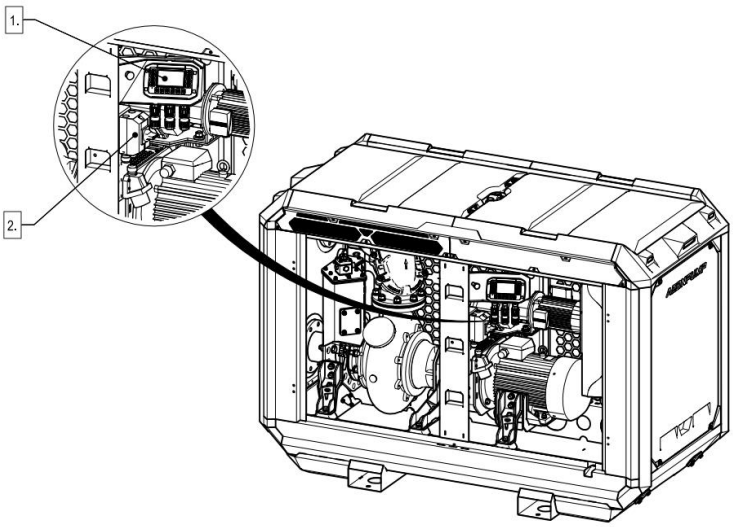

- Turn off the earth switch, if present.

WARNING – If after complete shutdown of the pump, the air temperature starts to drop to or below 2 degrees Celsius, it is mandatory to drain the pumped liquid from the pump housing, see Chapter "15. Draining the Pump at Risk of Freezing".

14.1. Stopping the Raptor light

- Turn the Start - Stop switch on the control panel from position 1 or P to position 0. Engine must stop.

- When you suspect that the liquid is beginning to freeze, drain the pump while the medium is still in the liquid state.
- Switch off earth switch if present.

15. Draining the Pump at Risk of Freezing

WARNING – If after complete shutdown of the pump, the air temperature starts to drop to or below 2 degrees Celsius, it is mandatory to drain the pumped liquid from the pump housing. Otherwise, the water contained in the pump housing will freeze and cause serious defects and material damage. If the above-mentioned action is not performed, the guarantee considered or declared null and void.

In order to completely drain the water from the pump, it is necessary to perform the following actions:

• Unscrew the water drain caps at the end of the pump housing (1).

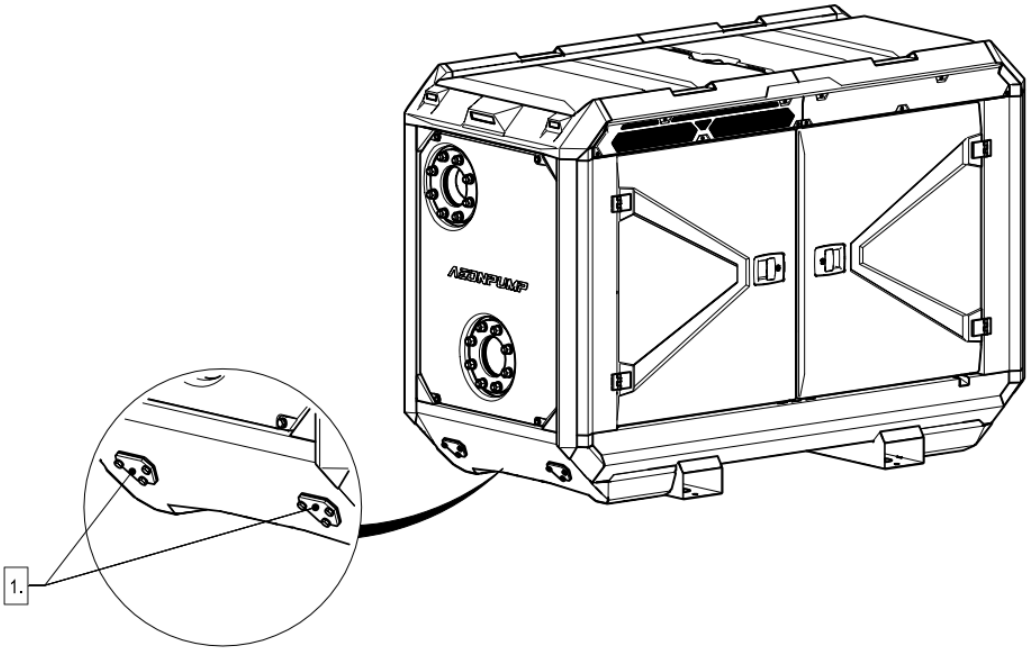

• Open the drain valve (2) (check that the valve is not clogged)

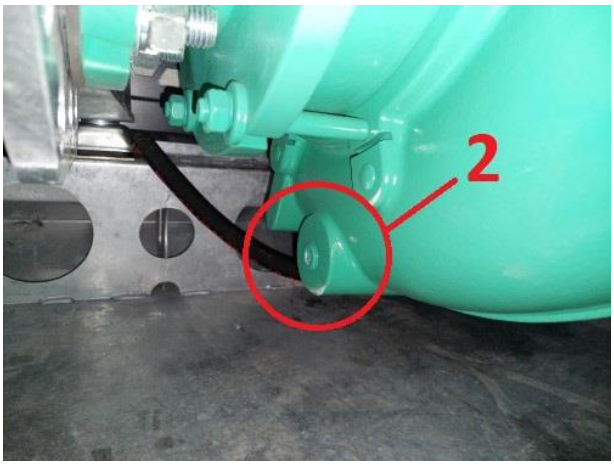

• Unscrew and remove the cap of the nonreturn valve, lift out the ball, clean the ball fit and the ball itself. Pay attention to the sealing rubber of the cap, it shall not be cracked or otherwise mechanically damaged

• Put a ball in place and screw the cap of the nonreturn valve.
• Close the drain valve when the liquid has drained completely.
• Close the drain covers of the housing.

16. Maintenance

16.1. General

When maintenance is insufficient, incorrect and/or not performed regularly this can lead to malfunctions of the pump or pump unit, danger to the user, high repair costs and lengthy breakdowns. Manufacturer is not responsible for accidents and damage that result from failure to follow the instructions.
Read the supplied manual carefully and follow the procedures and safety instructions.

DANGER - The engine must be stopped before any maintenance work is started. Comply with legal requirements when handling and disposing of old oil, filters and cleaning materials.

WARNING - Keep the engine's starting key out of reach of unauthorized persons.

WARNING - To immobilize engines with an electric starter, disconnect the negative battery terminal.

WARNING - At the end of the maintenance work, check that all tools have been removed from the engine and all safety guards, covers etc. replaced in their correct positions
.

WARNING - Before starting the engine, make sure that nobody is in the danger area.

WARNING - Leakage of oil can be extremely harmful to the environment. Do everything necessary to prevent oil leakage.

16.2. Maintenance instructions

WARNING - **Before each maintenance see specific model of pump or engine.**

- Clean the pump before beginning the work. Make sure the work area is clean.
- Use the correct tools and make sure they are in good condition. Use them in the proper manner.
- Replace damaged bolts, nuts and/or parts with damaged threads with new parts of the same fastener class.
- Replace used seals or tape. Only replace the flat and filled seals under the plugs with original seals from the pump manufacturer.

16.3. Daily maintenance of the pump

- Check for leaks from the pump and pipes
- Check the shaft seal for leaks
- Check the parts of the electrical system for visible damage
- Check the attachment of the electrical cables and plug connectors
- Check the level of the diesel tank (only fill with clean and water-free diesel fuel)
- Check the oil clarity and level of vacuum pump
- Check the oil level in diesel engine (after shutting down the diesel engine, wait a few minutes until the oil has collected in the sump)
- Check the oil level and clarity in sealing chamber of the screw centrifugal pump
- Check the operation of the non-return valve
- Check the operation of the floats

16.4. One-time maintenance after 50 hours of operation

- Change the oil in the vacuum pump *(see chapter "18. Vacuum pump maintenance")*
- Change the oil and oil filter of the diesel engine *(see user manual for Diesel engine)*
- Check the clarity of oil in mechanical shaft seal *(see user manual for "Screw centrifugal pump")*

16.5. Pump maintenance Every 12 months or 500 hours

- Change the oil and oil filter of the diesel engine *(see user manual for Diesel engine)*
- Check the pump bearing *(see manual for "Screw centrifugal pump")*
- Check the oil in the mechanical shaft seal *(see manual for "Screw centrifugal pump")*
- Clean the pump from dust and dirt
- Change the oil in the vacuum pump *(see chapter "18. Vacuum pump maintenance")*

16.6. Lubricants

The quantities named are maximum quantities after the systems have been completely emptied.

Lubricant point	Lubricant to be used	Quantity
Diesel Engine	**See user manual for the diesel engine**	
Oil chamber of the screw centrifugal pump	**See user manual of the screw centrifugal pump**	
Vacuum pump	**MOL Ultrans EP150**	**0,3L**
Lubrication point on the bearing bracket	**See user manual of the screw centrifugal pump**	

17. Vacuum pump maintenance

WARNING - Use only **MOL Ultrans EP150** oil for vacuum pump.

DANGER - Hot surface. Risk of burns! Prior to any action requiring touching the machine, let the machine cool down first.

Interval	Maintenance work
After first 50 hours	• Change oil in vacuum pump
Every 12 month or after 500 hours	• Change oil in vacuum pump • Clean the vacuum pump of dirt

17.1. Oil level inspection

- Switch off the pump.
- When the pump is stopped, wait 1 minute before checking the oil level in the vacuum pump.

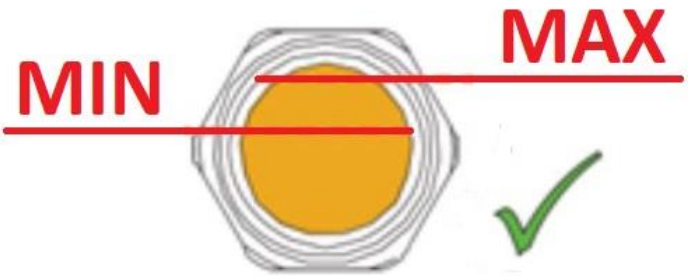

- Fill up if necessary, to do these, open the oil filling cup (1) top of the vacuum pump.

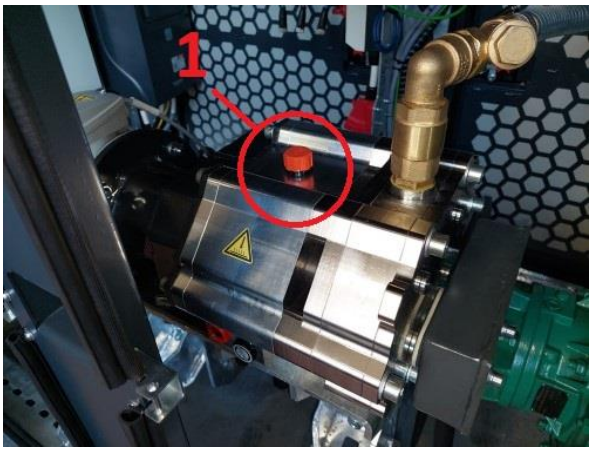

17.2. Oil change

Only use an oil type which has previously been approved and recommended by the manufacturer.
The oil level should stay constant over the lifetime of the oil. If the level does fall, this indicates a leak and the vacuum pump requires repair.

- Open the drain plug (1), let the oil fully drain out of the vacuum pump, it can take about 5 min.

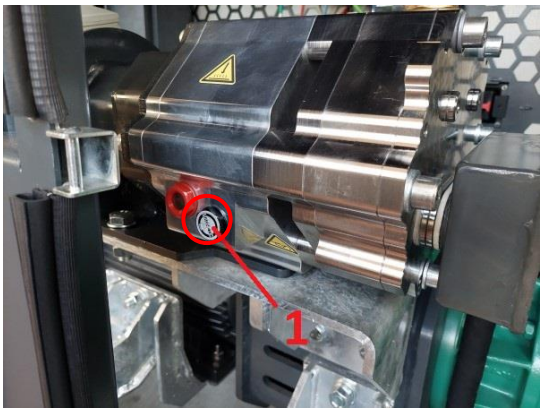

- Clean drain plug magnetic part from obstacles.

- Close the drain plug (1).
- Open the filling cup (2), fill the vacuum pump with fresh oil.

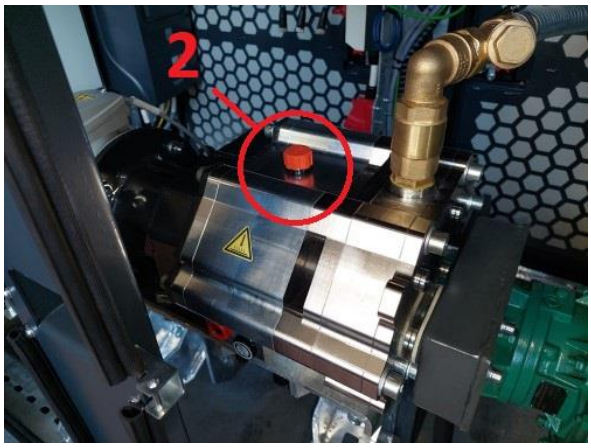

- Oil level must be full of the glass.

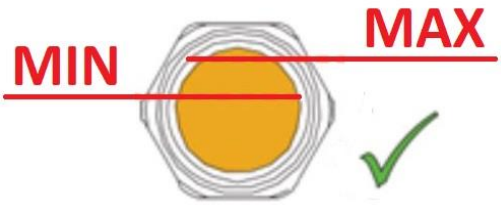

- Close the Filling cup (2)

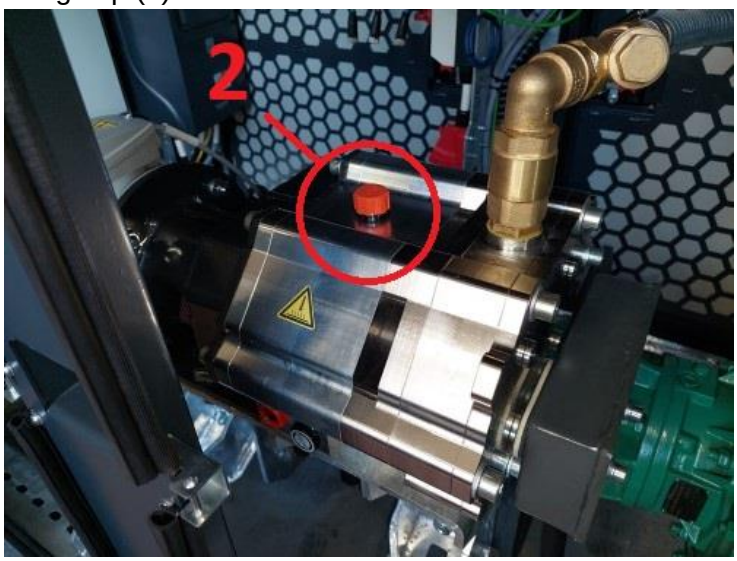

17.3. Vacuum pump belt tension

To check and tighten the vacuum pump belt is possible to do in the following steps.

- Unscrew the screws (1) and take off the safety guard cover (2). Measure the distance the belt can be depressed in the middle of the span. The distance must be approximately 7mm, if it's less or more that reading do following steps.

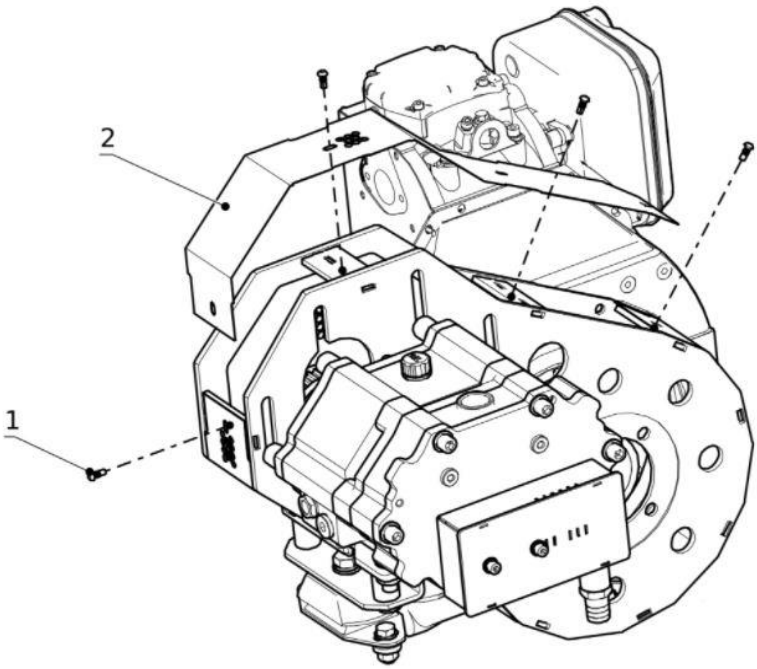

- Unscrew the fixing screws (3)

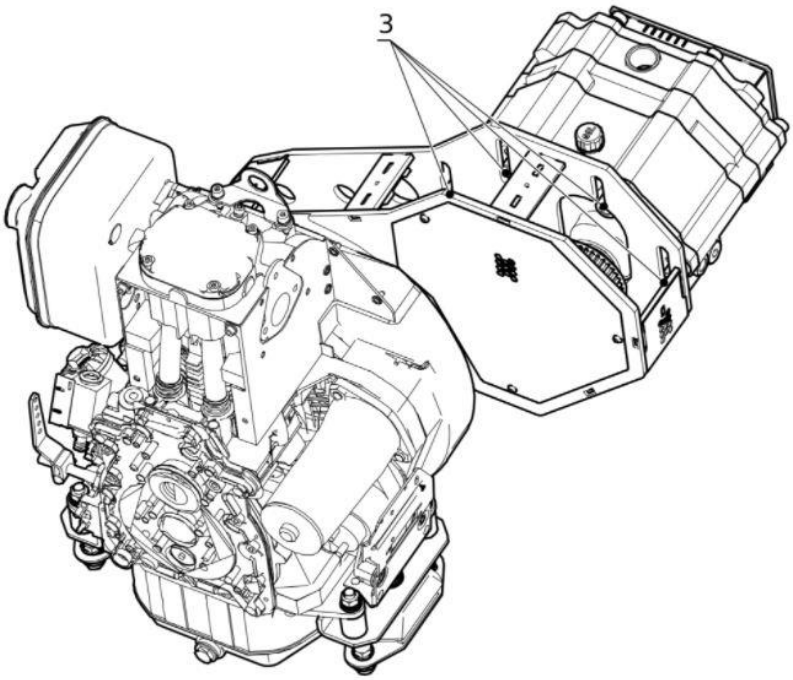

- Unscrew the counter screws 4 and 5, screw them when depressing in the middle of the span distance is approximately 7mm

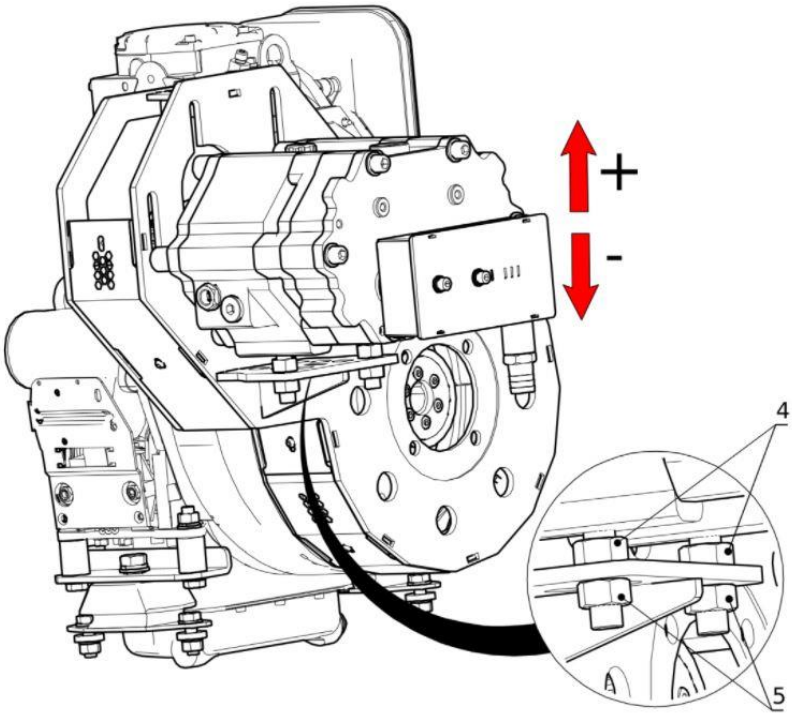

18. Problem / Solution

Problem	Solution
Pump does not pump liquid or has low productivity	**Increase pump speed**
	Check the validity of the pumped liquid
	Immerse fully the suction end of the suction hose
	Clean the suction hose filter
	Check the length of the discharge and suction line
	Change the suction hose
	Check and clean the impeller
	Dilute or mix the liquid to be pumped if possible
	Reduce the lifting height of pump
	Clean the discharge hose
	Check the operation of the vacuum pump
When the pump is switched on, it does not work	**Check that the pump is connected to the power supply (only electric driven pumps)**
	Change phase order (only electric driven pumps)
	Check phases (only electric driven pumps)
	Check fuse
	Check the STOP switch
	Check the wiring
Vacuum pump does not work	**Check for obstruction of the vacuum pump**
	Check fuse

	Check cable from vacuum pump to the power distribution box
Vacuum pump works with noise or heats up quickly	**Check oil level in the vacuum pump**
	Remove dirt from the vacuum pump
	Clean the vacuum pump
	Clean the exhaust pipe of the vacuum pump
The pump vibrates during operation	**Reduce the pumping height of pump**
	Check pump bearings for heating
	Check the oil level and oil quality in the bearing unit.
	check the visual condition of the clutch
	Clean the impeller
	Straighten and clean the discharge hose
	Straighten and clean the suction hose and filter

DANGER– If appear some pump defect and cannot find fault immediately contact the manufacturer